WALTER
Engineering Kompetenz

Turning, holemaking,
threading, milling

**Product highlights**
Edition 2026-2

_PRODUCT HIGHLIGHTS

# The cutting edge of metalworking.



# Groov·tec®

# To the max.

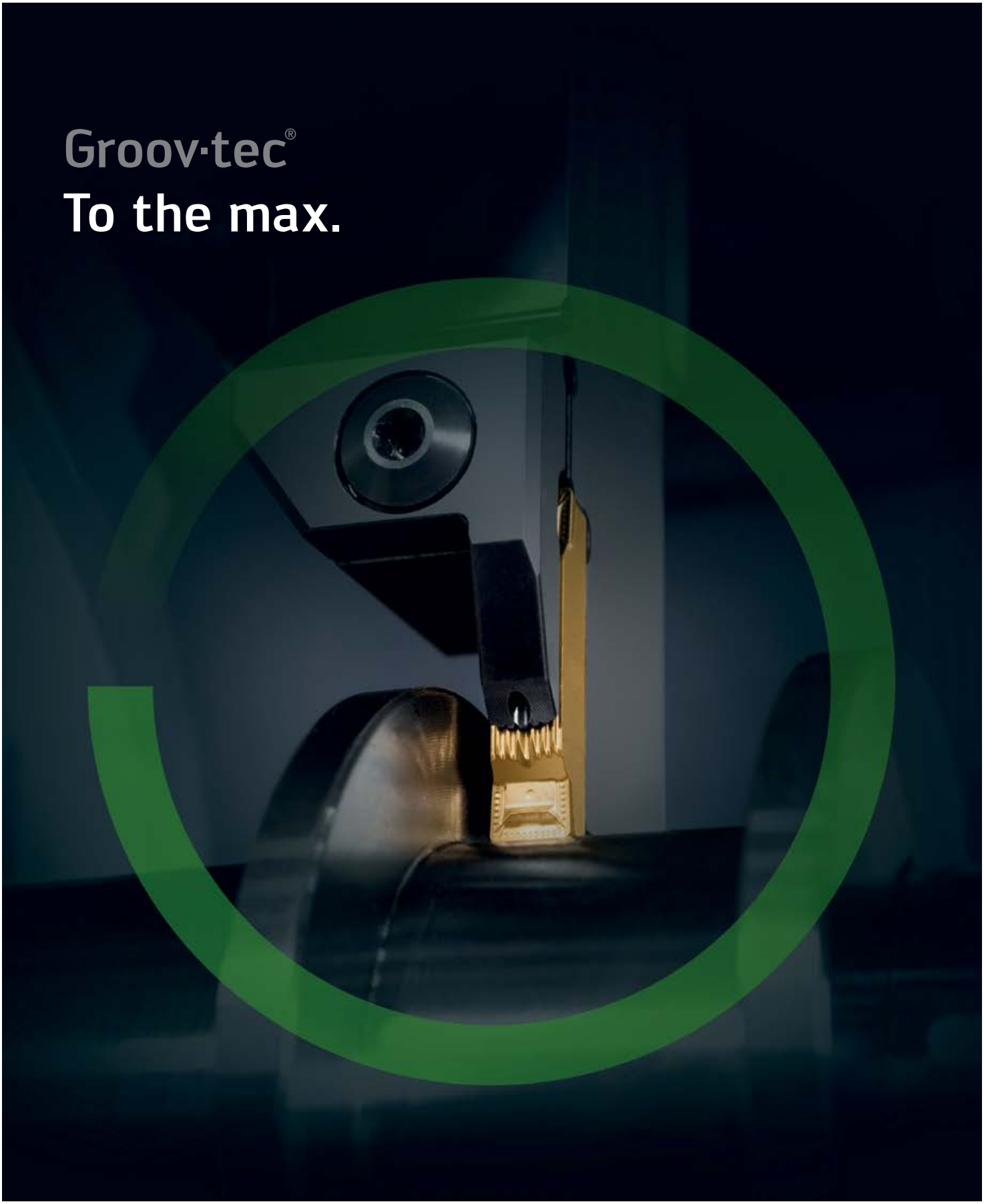

walter-tools.com

WALTER
Engineering Kompetenz

| ISO turning | Page |
|---|---|
| Tiger·tec® Gold turning grades WMP20G, WMP30G | 4 |

| Grooving | Page |
|---|---|
| WedgeFit Modular Grooving System G5610-P / G5620-P | 6 |
| Groov·tec® GD grooving system G5011 | 8 |
| Groov·tec® GD grooving system G5634-P / G5635 | 10 |
| Groov·tec® GD axial grooving system G5111 | 11 |

| Drilling tools with indexable inserts | Page |
|---|---|
| Drion·tec® E-Peak D5150 with exchangeable drill head DS50 | 12 |

| Boring and precision boring | Page |
|---|---|
| F4 and F6 precision drilling geometries | 15 |

| Tapping | Page |
|---|---|
| Thread·tec® Optima HSS-E-PM tap TD118 / TD218 Supreme | 16 |

| Thread milling | Page |
|---|---|
| TD610 Supreme thread milling cutter | 18 |

| solid carbide milling tool | Page |
|---|---|
| Solid Carbide Milling Cutter MC267 Advance | 20 |

| Rotating boring bars/adaptors | Page |
|---|---|
| HT06-C... & HT10-C... master adaptors | 21 |
| Weldon adaptors AF044 | 22 |
| Axial/Radial adaptors A2110-C / A2111-C | 24 |

# Stable in stainless-steel – tough in steel.

## EXPANSION OF THE RANGE

### NEW ADDITION TO THE PRODUCT RANGE

– WL17 and WL25 copy-turning indexable inserts in the FM4 and MM4 geometries

### THE GRADE

– Tiger-tec® Gold: innovative, highly textured MT-TiCN CVD coating – developed for maximum wear resistance
– Double post-treatment of the rake face for more stable cutting edges, reduced friction and built-up on the cutting edge
– New gradient substrate with higher toughness at the cutting edge to protect against chip impact

### THE GEOMETRY

– Negative basic form: FM5, MS3, MM5, MU5, MW5, RM5, RM7, HU5
– Positive basic form: FM2, FM4, FM6, MM4, RM4
– WL copy turning system: FM4, MM4

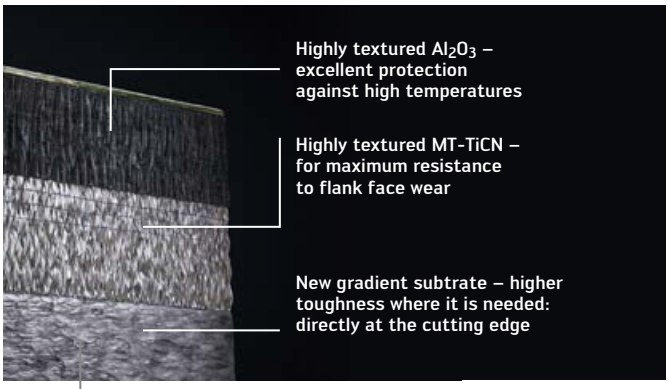


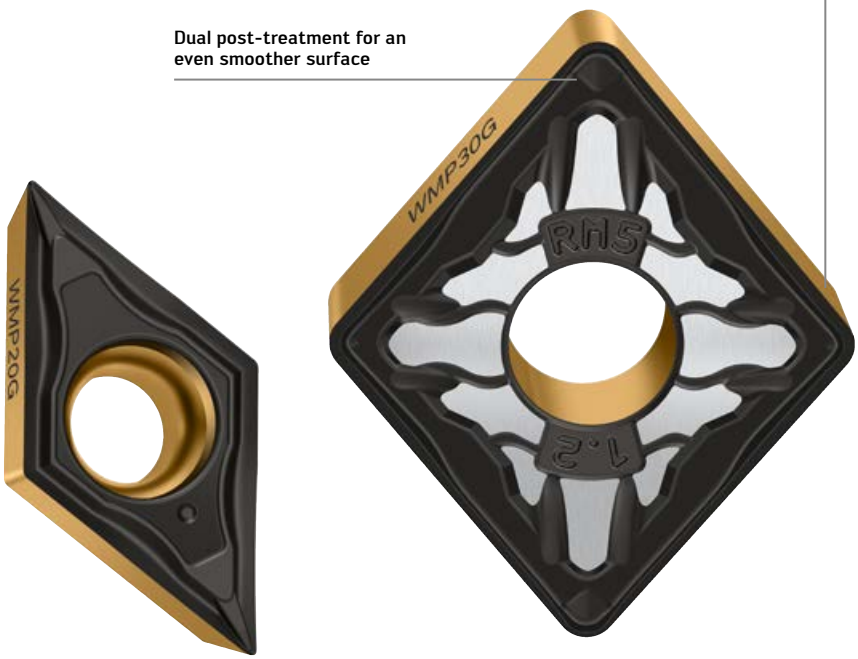


Powered by Tiger·tec® Gold

New Tiger·tec® Gold ISO M grades

Fig.: DCMT11T302-FM4 WMP20G
CNMG160612-RM5 WMP20G

## APPLICATION EXAMPLE

**Bearing hub**

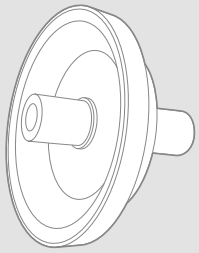

| | |
|---|---|
| **Material:** | 1.4462 | DIN X2CrNiMo12-5-3 | AISI 318LN (duplex material) |
| **Tool:** | C6-DCMNN-00090-16 |
| **Reversible indexable insert:** | CNMG160612-RM7 WMP20G |

| **Cutting data** | Competitor ISO M20 | **Walter WMP20G Tiger·tec® Gold** |
|---|---|---|
| **$v_c$ (m/min)** | 110 | 110 |
| **$a_p$ (mm)** | 1.0 –4.0 | 1.0 –4.0 |
| **f (mm)** | 0.40 | 0.40 |
| **Cooling** | emulsion, 40 bar | emulsion, 40 bar |
| **Tool life (units)** | 2 | 3 |

**Comparison: Tool life**

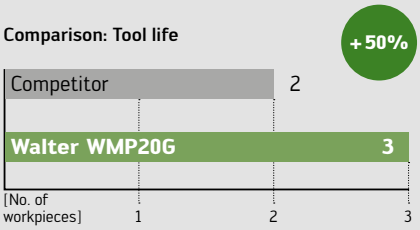


## THE APPLICATION

### WMP20G

- First choice for austenitic, duplex and ferritic/martensitic stainless materials
- Universal one for medium and high cutting speeds
- Problem solver on steel (where standard steel turning grades tend to fracture)
- Primary application: Stainless steel (ISO M); steel (ISO P); Secondary application: difficult-to-machine materials (ISO S)

### WMP30G

- Austenitic, duplex and ferritic/martensitic stainless materials
- Out-of-round or difficult to machine components (e.g. weld seams, armor plate)
- Large workpieces or single part manufacture
- Can be used at medium and low cutting speeds
- Primary applications: Stainless steel (ISO M); steel (ISO P); Secondary application: difficult-to-machine materials (ISO S)

**Machinability of stainless materials and grade recommendation**

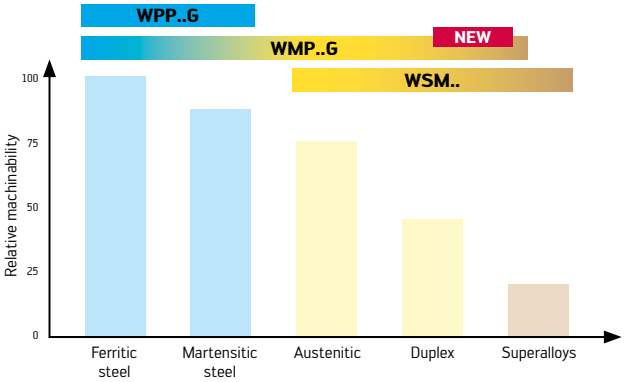


**Ferritic and Martensitic stainless steels** contain a lot of chromium (12-30%) and are machined with the wear-resistant grades WPP..G or WMP..G. They are similar to ISO P materials.

**Austenitic and Duplex steels** have a high chromium (12-28%) and nickel content (4-35%). They require positive chip formers and high toughness - properties of the grades WMP..G and WSM.

## POTENTIAL BENEFITS

- Increased tool life and reliability due to Tiger-tec® Gold coating for ISO M
- Reduction of grades due to flexible use of inserts on ISO M and ISO P materials
- Fewer fractures and built-up edges due to wear-resistant, tough grades that reduce chip impact

# Maximum stability – thanks to the double dovetail guide.

**NEW**

## THE TOOL

### Basic holders

- Modular basic holders G5610/G5610-P and G5620/G5620-P, with and without Precision cooling
- 2 dovetail guides for stable clamping
- Lateral clamping with 2 screws
- Shank sizes: 20×20, 25×25, 32×32 mm and 12 / 16 inches
- Walter Capto™ interfaces: C4, C5, C6

### The modules

- Grooving modules G5631 – GD26: cutting depths 15, 21 and 26 mm; insert widths 3 / 4 / 5 / 6 mm
- Grooving modules G4631 – DX18: Cutting depth 17 mm; insert widths 2 / 3 / 4 mm
- Screw clamping from above
- With and without Precision cooling
- Precision cooling via the clamping finger and base plate

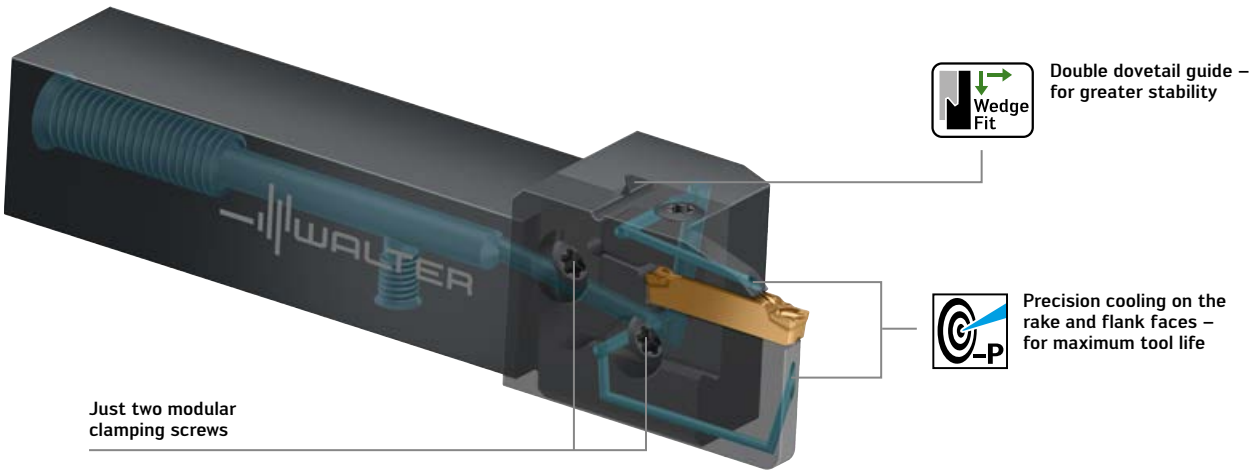


Fig.: G5610-2525L-M25-P

Fig.: GD26-5E500N08-UE6 WSM33G

## THE TECHNOLOGY

### Lateral forces are effectively absorbed

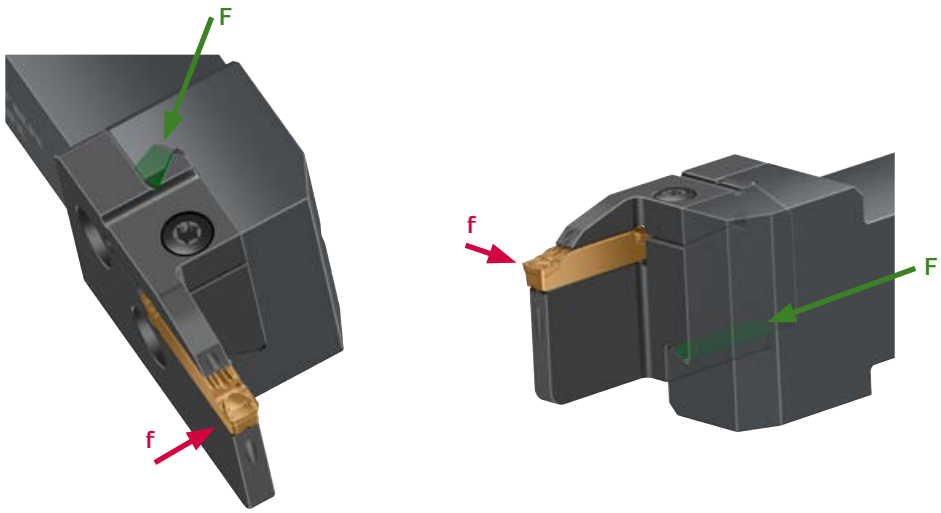

## THE TECHNOLOGY

**DX18**

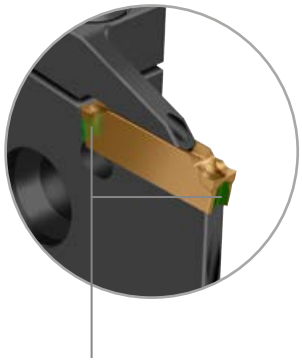

A positive engagement in the insert seat prevents incorrect fitting

**Groov·tec® GD**

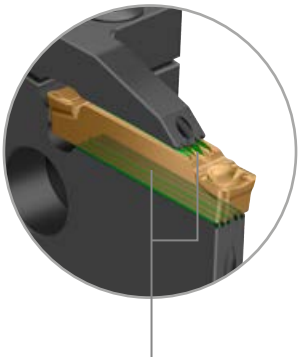

Double serration profile – for optimum positive locking in the insert seat

## THE APPLICATION

- Radial grooving and parting off, recess turning and copy turning up to 26 mm grooving depth
- Grooving module with Precision cooling; suitable for use from 10 bar up to a maximum coolant pressure of 150 bar
- Universal use on lathes of all kinds

**Simple installation of the module:**



Step 1



Step 2



Step 3

## POTENTIAL BENEFITS

- Maximum stability from a double dovetail guidance
- High flexibility due to a modular design
- Cost-effective compared with compact tools from the second module onwards
- Increased cutting parameters from a new serration profile and precision cooling
- Increased stability and process reliability from Groov·tec® GD serration profile

# Securely meshed – from narrow to very wide.

## EXPANSION OF THE RANGE

### NEW ADDITION TO THE PRODUCT RANGE

– GD26 indexable inserts in the UF4 and RK8 geometries, as well as matching tools G5111, G5634 and G5635

### THE TOOL

– Groov-tec® GD cutting tools G5011/G5011-P/G5011-C-P; with and without Precision cooling
– Indexable insert clamping can be operated from both sides
– Four cutting depths (T12, T21, T26, T33) for parting-off diameters up to 65 mm
– Shank sizes: 12×12, 16×16, 20×20, 25×25, 32×32 mm; Inch: 5/8", 3/4" and 1"
– Walter Capto™ sizes: C3-C6

### THE INDEXABLE INSERTS

– Patent-pending, double-edged GD26 cutting inserts with double serration clamping profile
– Insert widths: 2.5 / 3.0 / 4.0 / 5.0 / 6.0 / 8.0 mm

### THE GEOMETRY

– Grooving: CE4, CF5, CF6, GD6, GD3, CK8
– Groove turning: UA4, UD4, UE6, UF4 and UF8
– With full radius: RD4, RE6, RK8 and RF8

### THE GRADE

– 4 Tiger·tec® Gold PVD grades: WSM13G, WSM23G, WSM33G and WSM43G
– For steel, stainless steels and difficult-to-machine materials
– 3 Tiger·tec® Gold CVD grades: WKP13G, WKP23G and WKP33G
– For steel and cast iron machining

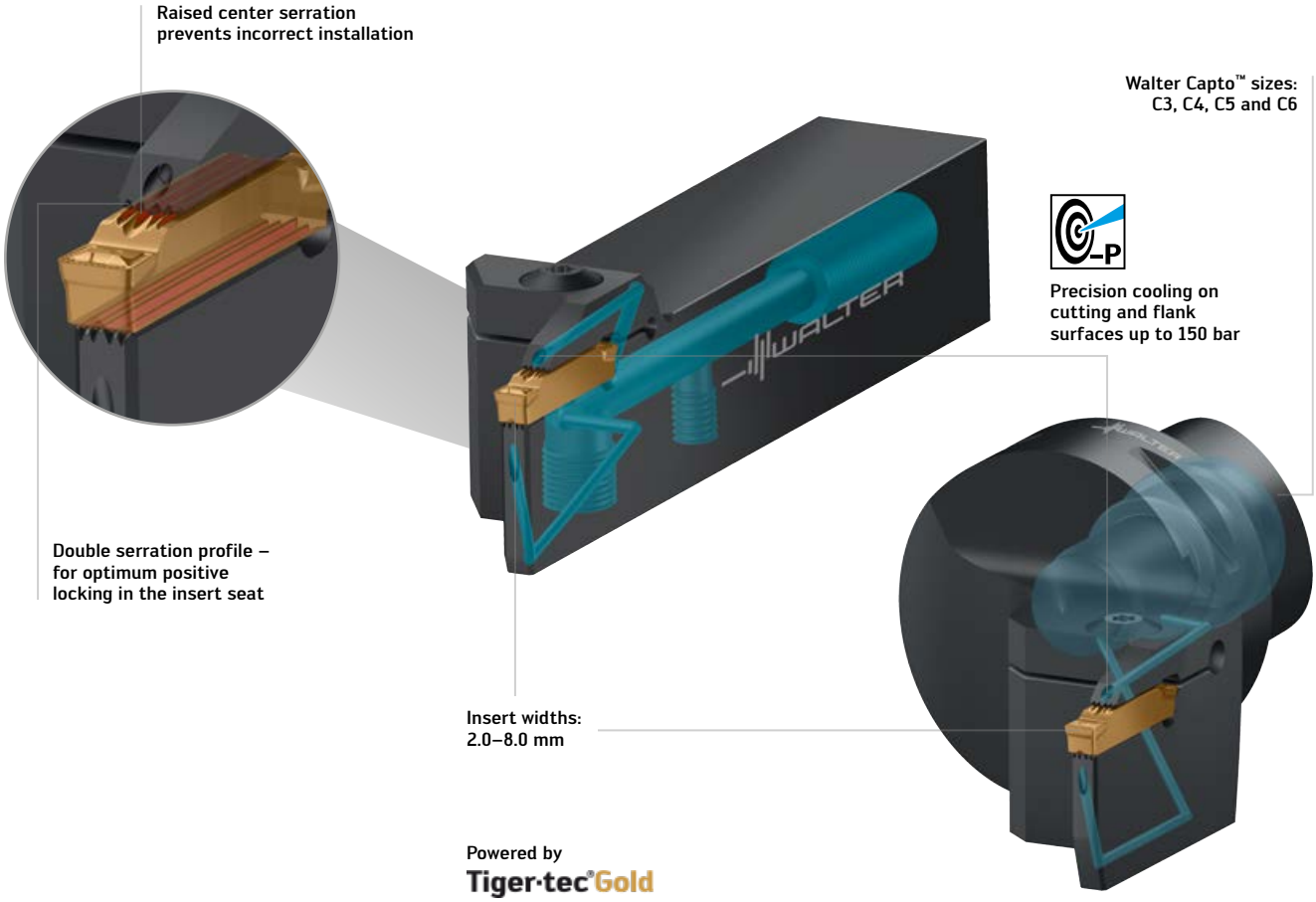


Groov·tec® GD grooving system

Fig.: G5011-2525R-5T21GD26-P
Fig.: G5011-C5R-5T21GD26-P

## THE TECHNOLOGY

- New insert design with double serration profile. The GD26 cutting insert and tool body (insert seat) are optimally interlocked. The positive fit absorbs lateral forces better during longitudinal and copy turning
- Conventional systems (e.g. without double serrations) are significantly less stable in comparison.

**Groov·tec® GD**

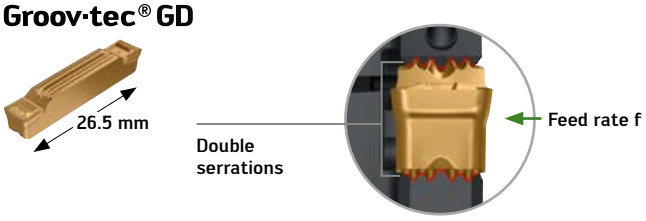


**Existing grooving inserts**

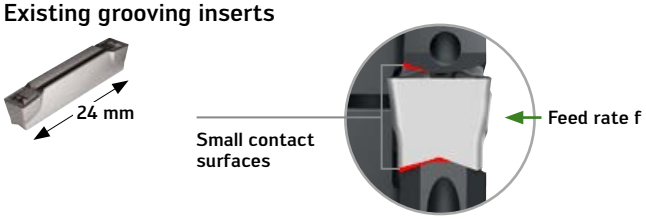


## THE APPLICATION

- Radial grooving, parting off and groove turning
- Universal use on lathes of all kinds

**Greater stability in all applications – with Groov·tec® GD**

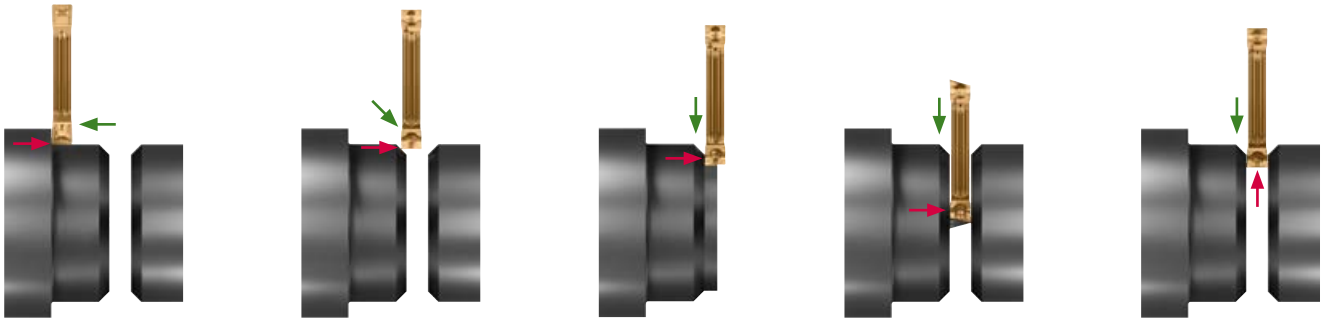


## POTENTIAL BENEFITS

- Increased stability and process reliability from Groov·tec® GD serration profile
- Increased cutting parameters from a new serration profile and precision cooling
- Maximum productivity and service life due to wear-resistant Tiger·tec® Gold grades

# The reliable parting-off process for high-volume production.

**NEW**

## THE TOOL

- Groov·tec® GD Grooving Modules G5634-P / G5635
- Reinforced grooving modules with precision cooling for parting off and grooving
- G5634 – Insert widths: 3.0 and 4.0 mm
- G5635 – Insert width: 3.0 mm
- For parting-off diameters: 42, 52 and 65 mm
- Precision cooling on the rake and flank faces
- Module heights: 33 and 43 mm

## THE INDEXABLE INSERTS

- Patent-pending, double-edged GD26 cutting inserts with double serration clamping profile

## THE APPLICATION

- Grooving/parting-off in confined spaces (e.g. on Multi-spindle machines)
- Parting off with low burr and pip formation (by 6°, 7° and 15° angled parting off inserts)
- Grooving module with Precision cooling; suitable for use from 10 bar up to a maximum coolant pressure of 150 bar

## APPLICATION EXAMPLE

**Plug-in coupling**

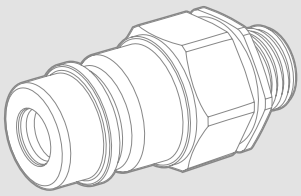

| | |
|---|---|
| **Material:** | 1.5919 | 15CrNi6 | 4320 |
| **Strength:** | 500–850 N/mm² |
| **Tool:** | G5634-33L-3T21GD26-P |
| **Indexable insert:** | GD26-3E300N03-GD3 WSM33G |

| Cutting data | Competitors | Walter WSM33G Tiger·tec® Gold |
|---|---|---|
| $v_c$ (m/min) | 50 | 138 |
| f (mm) | 0.13 | 0.17 |
| T (mm) | 12.5 | 12.5 |
| machining time (s) | 60 | 60 |
| Tool life | 800 | 1,200 |

**Comparison: Tool life**

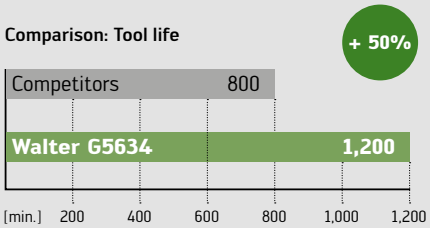


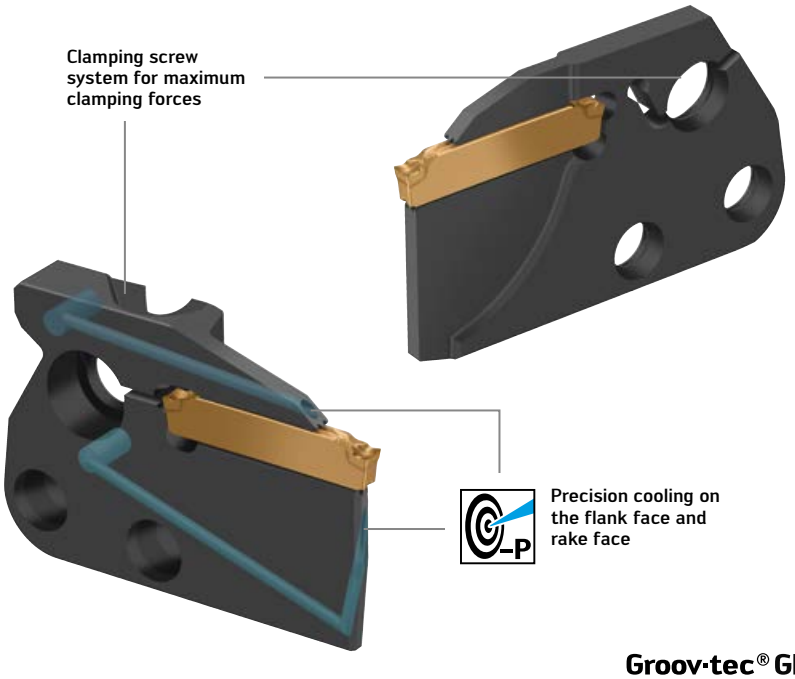


**Modules – also compatible with tool holders from other brands**

**Fig.: G5634-33L-3T21GD26-P**
**G5635-30N-3T21GD26**

## POTENTIAL BENEFITS

- Greater stability and tool life, reduced vibration from a reinforced module
- Maximum process reliability due to reinforced Tool body and Groov-tec® GD double serration
- Optimised also for use in tool holders from other brands

# Significantly more stable when working at greater depths.

## EXPANSION OF THE RANGE

### NEW ADDITION TO THE PRODUCT RANGE

– G5111-P grooving tools for a cutting depth of 33 mm

### THE TOOL

– Groov·tec® GD axial grooving tool G5111-P
– Precision cooling on rake and flank surfaces of the axial groove
– Indexable insert clamping can be operated from both sides
– 3 cutting depths: T21, T25 and T33 mm
– Axial grooving diameter ranges: 34-500 mm
– Shank sizes: 25×25 mm and 1 inch

### THE INDEXABLE INSERTS

– Patent-pending, double-edged GD26 cutting inserts with double serration clamping profile
– Insert widths: 3.0 / 4.0 / 5.0 / 6.0 mm

### THE APPLICATION

– Axial Grooving, Groove turning and Copy turning
– Universal use on lathes of all kinds
– Precision cooling: can be used from 10 bar, up to 160 bar maximum coolant pressure

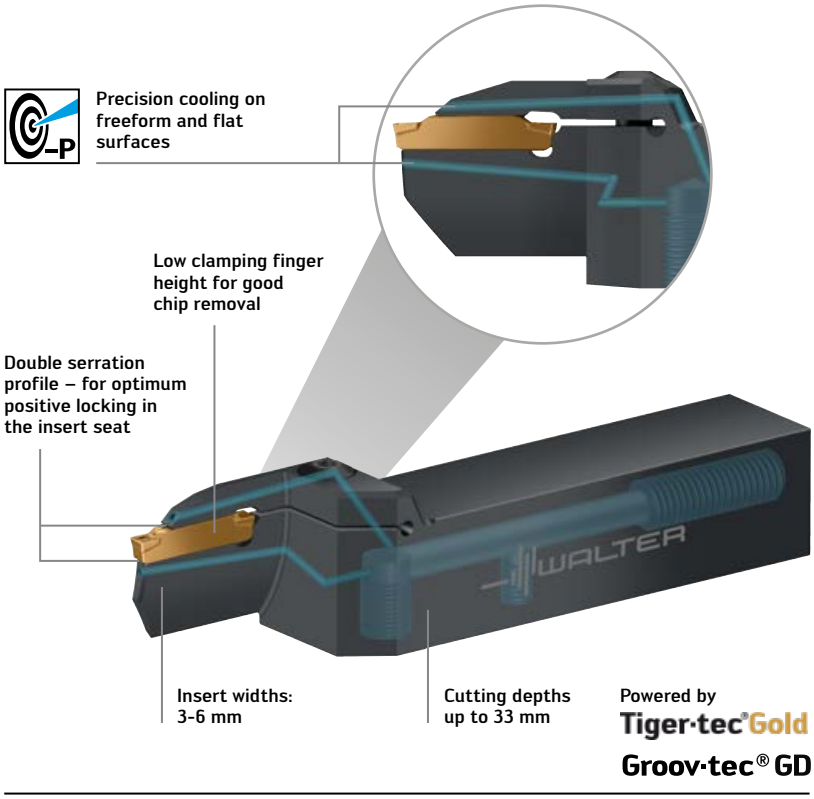


### APPLICATION EXAMPLE

**Coupling flange – axial grooving $D_{min}$ 40 mm**

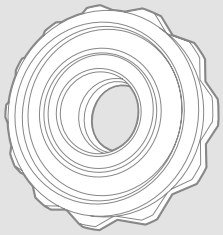

| | |
|---|---|
| **Material:** | C45 (1.0503) |
| **Tensile strength:** | 630–780 N/mm² |
| **Tool:** | G5111-2525L-5T12-040GD26 |
| **Indexable insert:** | GD26-5E500N08-UD4 WKP23G |

| Cutting data | Competitor ISO P20 | Walter WKP23G Tiger·tec® Gold |
|---|---|---|
| s (mm) | 5 | 5 |
| $v_c$ (m/min) | 150 | 150 |
| f (mm) | 0.2 | 0.2 |
| T (mm) | 5 | 5 |
| Tool life (units) | 200 | 400 |

**Comparison: Tool life**

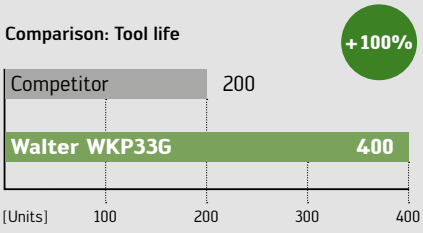


### POTENTIAL BENEFITS

– Maximum process reliability and service life due to stable Groov·tec® GD serration profile
– Increased cutting parameters from double serration profile
– Perfect chip control due to Precision cooling on rake and flank surfaces

# The peak of productivity.

## EXPANSION OF THE RANGE

### NEW ADDITION TO THE PRODUCT RANGE

**MF Geometry**
- For demanding bores and shallow hole faces

**MC Geometry**
- Optimized micro-geometry with increased corner strength for machining cast iron

### THE TOOL

- Drion·tec® E-Peak exchangeable head drill D5150
- Ø 9-17.99 mm (0.354-0.705")
- Drilling depths: 3, 5 and 8 × $D_C$
- Optimized Flute geometry with Internal coolant for best chip removal and bore quality
- Several exchangeable head dimensions can be used per body

**The interchangeable head**
- Exchangeable head DS50
- High carbide volume for maximum feed rates

### THE GEOMETRY

**M**
- The universal one – for maximum flexibility
- Can be used on almost all ISO materials
- Very good output with a wide range of cutting data

**MC**
- For cast iron with increased corner strength
- Reduces fractures at the exit of drill holes in ISO K materials

**MF**
- For bores with a flat bottom (180°)
- Ideal for high-precision pilot holes and preliminary drilling

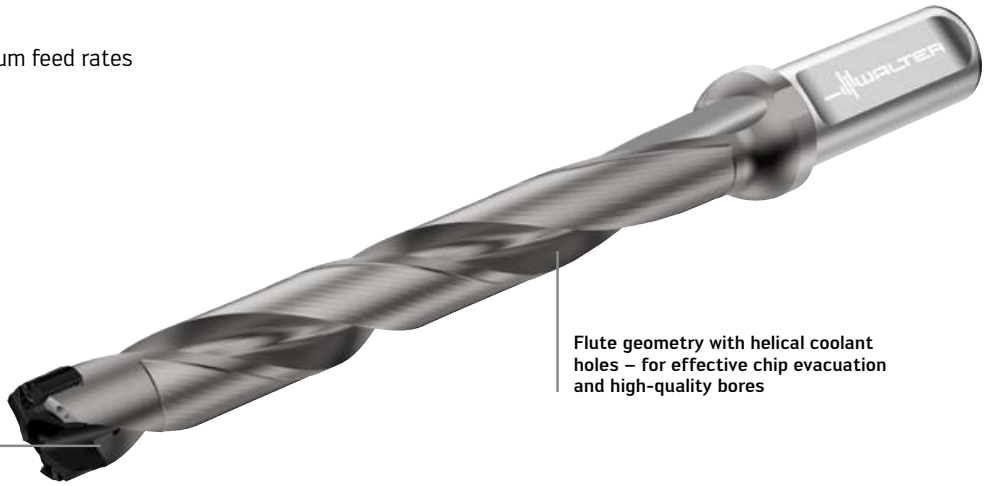


Robust design – for maximum productivity due to maximum feeds and speeds

Flute geometry with helical coolant holes – for effective chip evacuation and high-quality bores

**M-geometry – the universal one, powerful, for maximum flexibility**



Small cross cutting edge – for low cutting forces

Support chamfer – for dynamic stability

Point angle – good centering and hole quality from stable, vibration-free engagement

NEW

**MF geometry – for a flat hole face and improved accuracy**

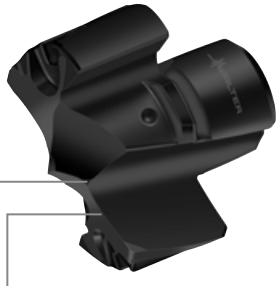

180° point angle – for flat hole faces

Reinforced cutting edge – for high Wear resistance

## THE GRADE

**WKK35**
- Thick PVD grade with a hard Substrate for ISO K (optional: ISO P)

**WMS35**
- Thin PVD multilayer grade with a tough Substrate for ISO M & S (optional: ISO P & N)
- Resistant to chipping and flaking at the round chamfer

**WPP35**
- High-performance PVD grade with a tough Substrate for ISO P (optional: ISO M, K, N, S, H)
- Resistant to fractures and built-up on the cutting edge

## THE INTERFACE
- Patented, robust interface design between exchangeable head and body
- For maximum release torque
- Stable overall torque - even after many installations
- Increasing the holemaking service life
- Quick and easy assembly; no additional assembly parts

## THE APPLICATION
- High-volume production for cross-industry applications
- Large cutting data window with high cutting parameters
- Primary application: ISO P, M, K and S; Secondary application: ISO N and H
- Hole tolerance H9/H10
- All common drilling operations (e.g. inclined entry and exit, cross and stack drilling, etc.)

## APPLICATION EXAMPLE

### Gear lever (car)

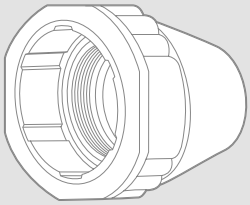

**Material:** GJS500 | ISO K | 5.3200

**Strength:** approx. 500 N/mm²

**Table:** Tool: D5150 | Ø 17mm | 5 × Dc
Interchangeable head: DS50 | Ø 17.5mm | MC Geometry | WKK35

| Cutting data | Competitors | Walter Drion·tec® E-Peak |
|---|---|---|
| $v_c$ (m/min) | 99 | 99 |
| n (min$^{-1}$) | 1,800 | 1,800 |
| $f_n$ (mm) | 0.44 | 0.44 |
| $v_f$ (mm/min) | 792 | 792 |
| Tool life(No. of bores) | 3,640 | 5,600 |
| Tool life (m) | 178 | 274 |
| Tool life (min.) | 224 | 345 |

**Comparison: Tool life**

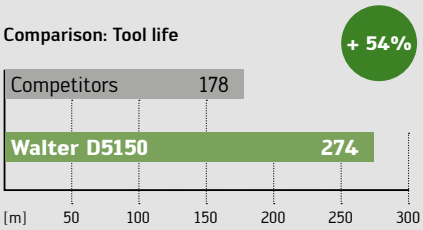


**Also available as**

Walter Xpress

**NEW**

**MC geometry – optimised for ISO K**



**Enlarged facet – reduces fractures at the exit of the bore**

## POTENTIAL BENEFITS
- Highest productivity and low costs per hole due to high Feed rate
- Maximum process reliability from a stable interface and drill body
- Minimized warehousing and purchasing costs due to universal geometry
- Optimised geometries for ISO K, flat hole faces and high precision
- Reduced machining time, as no Pilot drilling is required



# The new TC... generation for precision boring.

**NEW**

### THE INDEXABLE INSERTS

- 3 cutting edges with a positive basic profile
- 3 insert sizes with corner radii of 0.2 and 0.4 mm respectively
- TCGT06
- TCGT09
- TCGT11
- All fully ground circumference

### THE GEOMETRY

**F4 – the universal one**

- 15° rake angle
- For steel, stainless steel and materials that are difficult to machine
- For long overhangs

**F6 – the stable one**

- 5° rake angle
- For cast iron and steel materials
- For unfavourable machining conditions

### THE GRADE

- 3 grades for maximum performance: WPP35G, WPM15G and WAK15

### THE APPLICATION

- Precision boring in: steel, stainless steel, cast iron, NF metals, superalloys/Titanium
- Bore tolerance range: IT9–IT10
- Suitable for precision boring tools B5110, B5115, B5120 and B5125

**New TC... generation for precision boring**

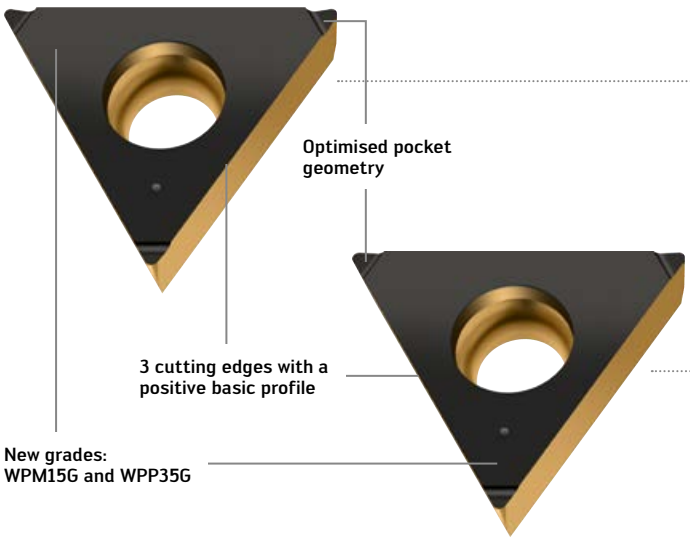


Fig.: TCGT090204-F4 WPP35G

Fig.: TCGT090204-F6 WPP35G

**Precision boring tool B5115**




Walter Precision XT

Fig.: B5115-044-056-C4-TC09

### POTENTIAL BENEFITS

- Reducing vibrations through new geometries
- Optimized surface quality due to high operational smoothness
- Improved chip removal
- High process reliability through reliable chip control

# The new high-performance class in Thread cutting.

**NEW**

## THE TOOL

- HSS-E-PM tap
- Grades: WY60RG, WY60BA
- Tolerances: 6HX, 6GX and 2BX
- Variant: Left-hand thread

**Thread types**

- DIN: metric, Metric fine, UNC, UNF, G
- DIN/ANSI: UNC, UNF

**TD118 – Blind-hole thread up to 3 × $D_N$**

- Chamfer forms: C and E
- Variants: with axial and radial coolant supply

**TD218 – Through hole threads up to 3.5 × $D_N$**

- Chamfer form B
- Variant: with radial coolant supply

## THE APPLICATION

- Areas of use: General mechanical engineering, the automotive and energy industry
- Suitable for ISO materials P, M, K and N

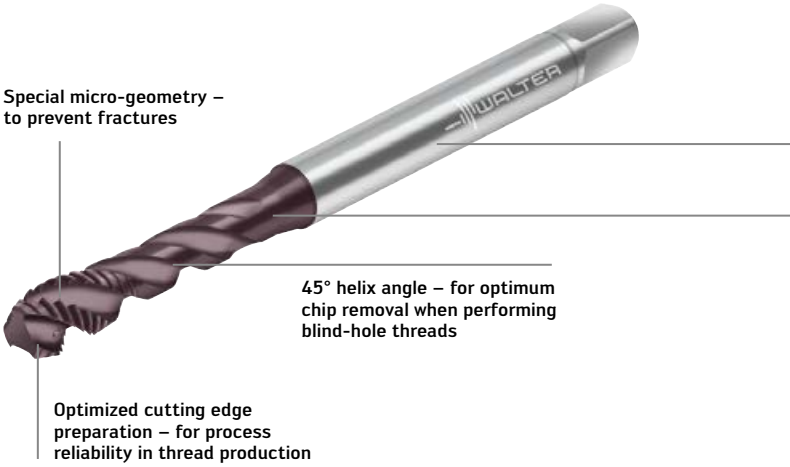


**Thread·tec® Optima**

Thread·tec® Optima TD118 Supreme — Fig.: TD118-M10-C0-WY60RG

### TD118 Supreme

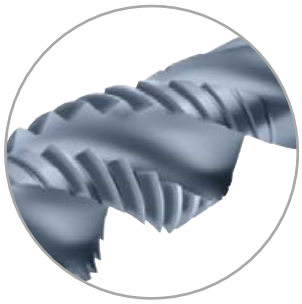

≤ 2.5×$D_N$

| P | M | K | N |
|---|---|---|---|
| •• | •• | •• | • |

**Grade WY60BA: high output in ISO materials P, M and K (recommendation up to 2.5 × $D_N$)**

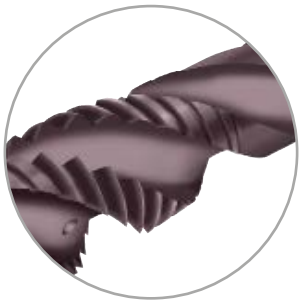

≤ 3×$D_N$

| P | M | K | N |
|---|---|---|---|
| •• | •• | • | •• |

**Grade WY60RG: universal application; excellent Chip formation (recommendation up to 3 × $D_N$)**

## APPLICATION EXAMPLE

### Mounting bracket – Thread cutting

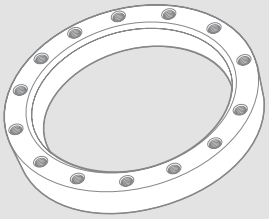

| | |
|---|---|
| **Material:** | 1.4571 |
| **Tool:** | TD218-M12-C0-WY60RG |

| **Cutting data** | Competitors | **Walter TD218** |
|---|---|---|
| **$v_c$ (m/min)** | 5 | 5 |
| **Thread depth (mm)** | 20 | 20 |
| **Cooling** | Emulsion | Emulsion |
| **Adaptor** | AB035 | AB035 |

**Comparison: Tool life**

**+ 100%**

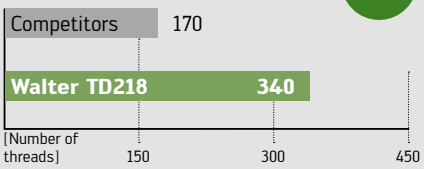


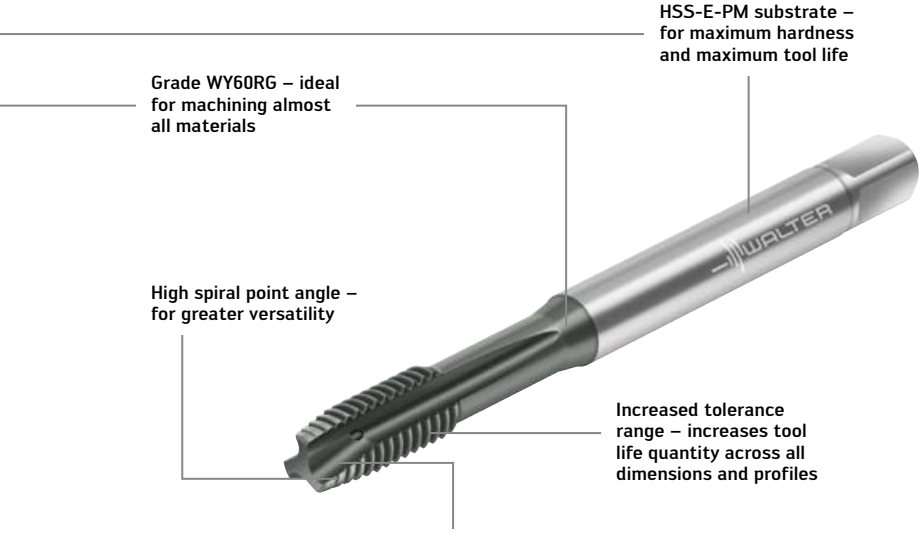


TD218 Supreme through-hole tap

Fig.: TD218-M10-C0-WY60RG

## TD218 Supreme

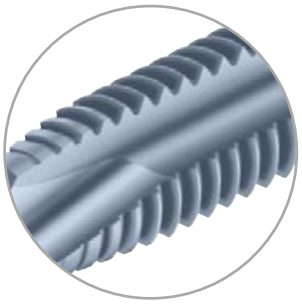

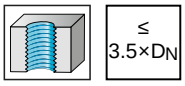


| P | M | K | N |
|---|---|---|---|
| •• | • | •• | • |

**Grade WY60BA: maximum tool life in ISO materials P and K**



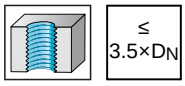


| P | M | K | N |
|---|---|---|---|
| • | •• | • | •• |

**Grade WY60RG: maximum tool life in ISO materials M and N**

## POTENTIAL BENEFITS

- Reliable thread production with process reliability in virtually all materials
- Unmanned shifts possible
- Suitable for use with a wide range of materials
- Reduction in tool and stock costs

# Process reliability and fast – with outstanding performance.

## EXPANSION OF THE RANGE

### NEW ADDITION TO THE PRODUCT RANGE

**1.5 × $D_N$ (including chamfer)**
- M3–M10
- M6×0,5 – M18×1,5
- UNC8 - UNC5/8
- UNF8 - UNF9/16
- G1/8 – G1/4

### THE TOOL

- Universal One - TD610 Supreme full-effective thread milling cutter
- With and without internal cooling
- Shank in accordance with DIN 6535 HB
- With a chamfer

**The range**
- M4-M20
- M4×0.5-M20×2
- MJ 4 - MJ 12
- UNC8-UNC7/8
- UNJC 10 - UNJC 7/16
- UNF8-UNF3/4
- UNJF 10 - UNJF 7/16
- G1/16-G1
- NPT 1/16 - NPT 1
- NPTF 1/16 - NPTF 1

### THE APPLICATION

- Blind-hole and through-hole threads
- ISO materials P, M, K, N and S up to 48 HRC
- Thread depth ≤ 2 × $D_N$
- Ideal for strict requirements on process reliability (e.g. for expensive components)

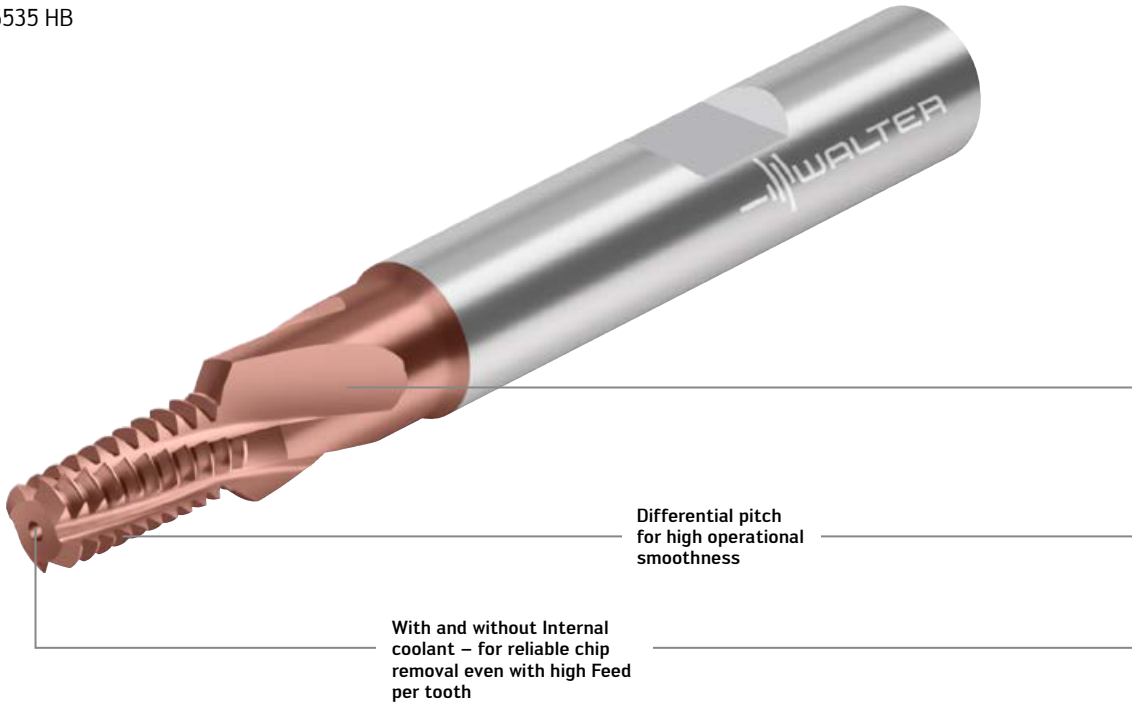


### POTENTIAL BENEFITS

- Reliable chip removal even at high feed per tooth from internal coolant
- Short machining times and high tool life quantities with few radius corrections
- Excellent thread quality
- Universal One - due to very large product offering
- Countersinking a core hole and thread milling with a single tool

WALTER
Reconditioning Service
Original Walter Quality

## APPLICATION EXAMPLE

### Sledge

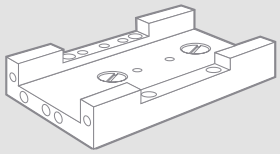

| | |
|---|---|
| **Material:** | X6CrNiMoTi17-12-2 \| 316Ti \| 1.4571 |
| **Strength:** | 775 N/mm² |
| **Tool:** | TD610-M6-W1D-WB10TU |
| **Thread size/depth:** | M6 / 12 mm |

| Cutting data | Competitor | Walter TD610 Supreme |
|---|---|---|
| $v_c$ (m/min) | 50 | 60 |
| $f_z$ (mm) | 0.036 | 0.05 |
| Number of radial cutting edges (85%/15%) | 2 | 2 |
| Machining time per thread (s) | 10 | 7.5 |
| Tool life No. of threads | 2379 | 5250 |

**Comparison: Tool life**

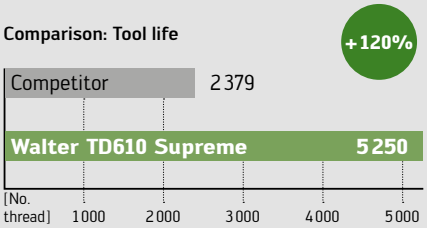


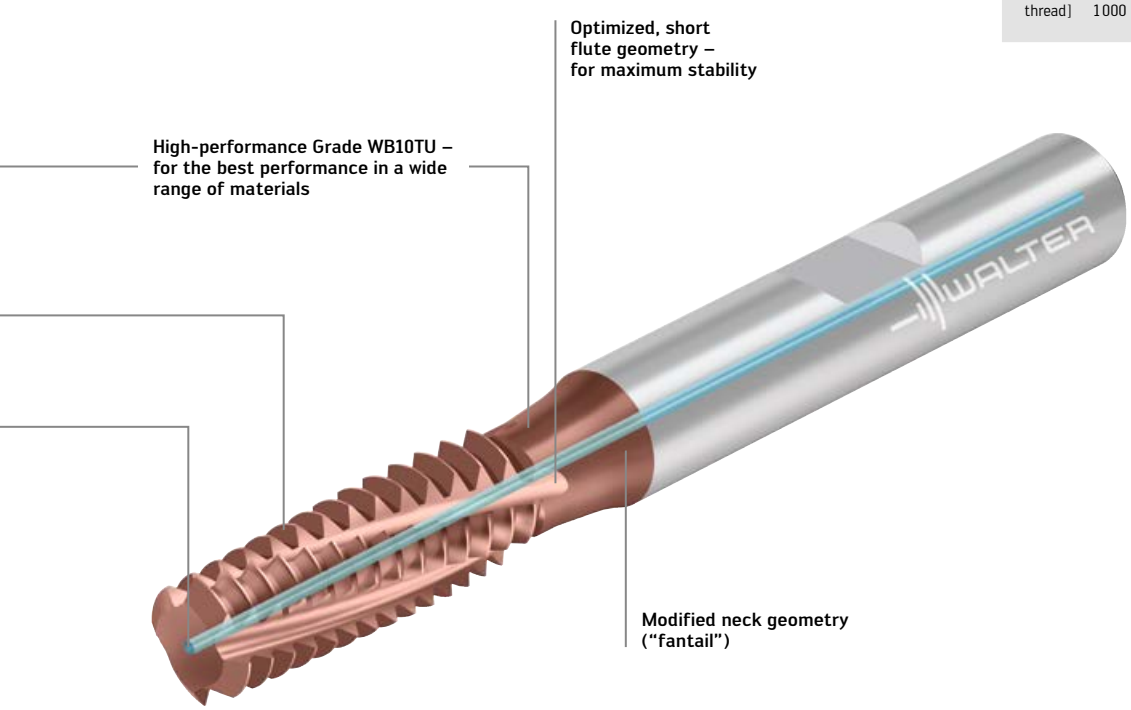


Solid carbide full effective thread milling cutter

Fig.: TD610-M10-W1D-WB10TU

# Specialist in coated aluminium with outstanding performance.

## EXPANSION OF THE RANGE

### NEW ADDITION TO THE PRODUCT RANGE

- Ø 1–20 mm
- z3
- With corner radius
- With neck

### THE TOOL

- Solid carbide cutter MC267 Advance
- Designed for machining ISO N materials

### THE GRADE

- High-performance grades WJ30DY and WJ30DD

### THE APPLICATION

- Primary application: ISO N
- Suitable for universal use in roughing, Semi-finishing and Finishing
- Machining of residual material with tight radii in the aerospace industry
- Specialist in finishing high-sided parts

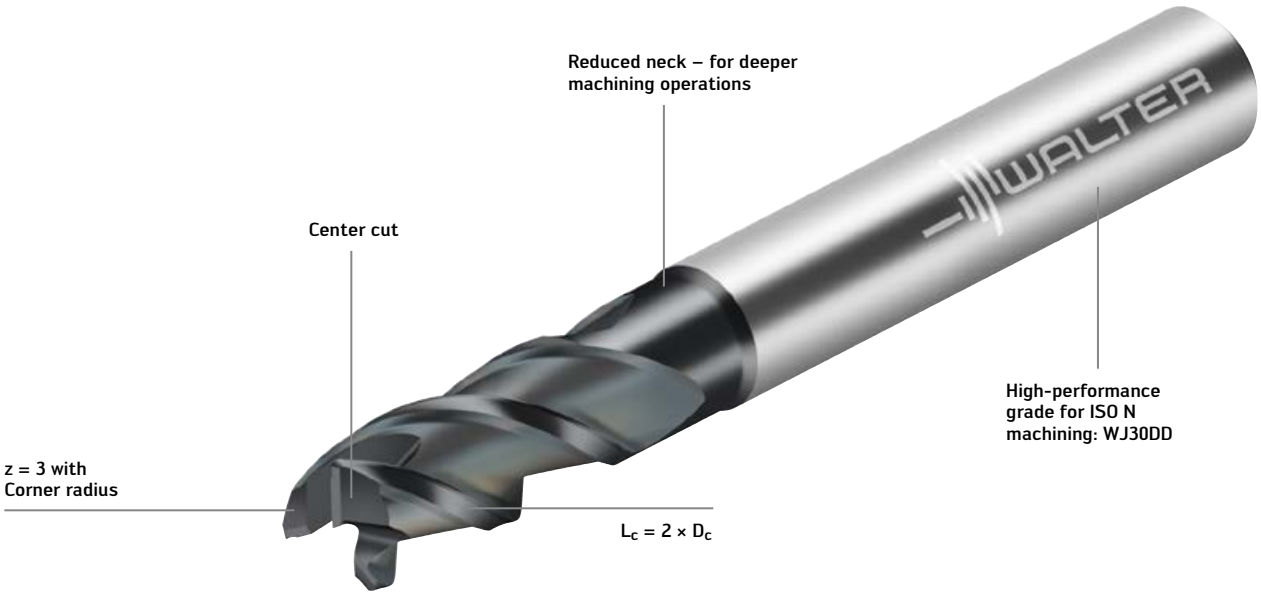


MC267 Advance solid carbide milling cutter Fig.: MC267-10.0A3B050C-WJ30DD

### POTENTIAL BENEFITS

- Highly reliable and universally applicable across all industrial sectors
- Optimal operational smoothness and a significant increase in tool life due to differential pitch
- Maximum tool life due to a special substrate

WALTER
Reconditioning Service
Original Walter Quality

# Reliable and stable: HSK-T for Walter Capto™.

## EXPANSION OF THE RANGE

### NEW ADDITION TO THE PRODUCT RANGE

– Also available with HSK-T

### THE TOOL

– Master from HSK-T to Walter Capto™
– HT06-C... for HSK-T 63
– HT10-C... for HSK-T 100
– Update in accordance with ISO 12164-1 with data carrier hole
– Balanced construction
– Modular design

### THE INTERFACE

– Walter Capto™ C5–C8
– HSK-T on Walter Capto™
– HSK-T design for high centre height accuracy

### THE APPLICATION

– Can be used on machining centers, lathes and multi-task machines
– Turning and Grooving
– Areas of use: General mechanical engineering, mold and die making, aerospace, energy and automotive industries




Master adaptor from HSK to Walter Capto™ Fig.: HA06-C5-050-090

### POTENTIAL BENEFITS

– High level of process reliability due to robust system
– Stability, rigidity and flexibility combined in one system
– Can be used on all machine types (machining centers, lathes, etc.)
– Minimal preparation required as integrally balanced construction created during manufacture

# New variants with face cooling.

## EXPANSION OF THE RANGE

### NEW ADDITION TO THE PRODUCT RANGE

– With additional face cooling

### THE TOOL

– Internal coolant supply
– For tools with a parallel shank and lateral clamping flat according to DIN 1835-B and DIN 6535-HB
– Ø 6–40 mm
– 3 lengths: 65, 120 and 160 mm (HSK)
– 3 lengths: 70, 100 and 160 mm (SK, MAS-BT, CAT-V)




Weldon adaptor with face cooling Fig.: AF044-H63-W12-120

## THE INTERFACE

- HSK-A63, HSK-A100
- SK40, SK50
- MAS-BT40, MAS-BT50
- CAT-V40, CAT-V50

## THE APPLICATION

- For Solid tools
- Can be used for milling and drilling
- Areas of use: General mechanical engineering, mold and die making, aerospace, medical technology, automotive and energy industries




**Weldon adaptor with face cooling**

**Fig.: AF044-S40-W16-063**
**Fig.: AF044.K40-W13-067**
**Fig.: AF044-J40-W08-160**

## POTENTIAL BENEFITS

- Improved chip evacuation through additional face cooling
- Universal application
- High precision concentricity for improved tool life and better surfaces

# Direct coolant transfer: Walter Capto™ blade adaptors.

## EXPANSION OF THE RANGE

### NEW ADDITION TO THE PRODUCT RANGE

– For blade tools (e.g. G5041...-P) with Precision cooling

### THE TOOL

– Axial and radial designs
– Right-hand and left-hand versions (axial)
– Neutral design (radial)
– Direct coolant transfer for blade tools with Precision cooling
– Coolant pressure up to a maximum of 80 bar
– Additional external cooling via an (adjustable) Coolant nozzle is possible
– Walter Capto™ blade adaptor in accordance with ISO 26623

### THE INTERFACE

– Walter Capto™ C4, C5 and C6

### THE APPLICATION

– Suitable for grooving operations
– For parting blades with 26 and 32 mm
– Areas of use: General mechanical engineering, tool and mold making, the automotive and energy industry, small-parts production

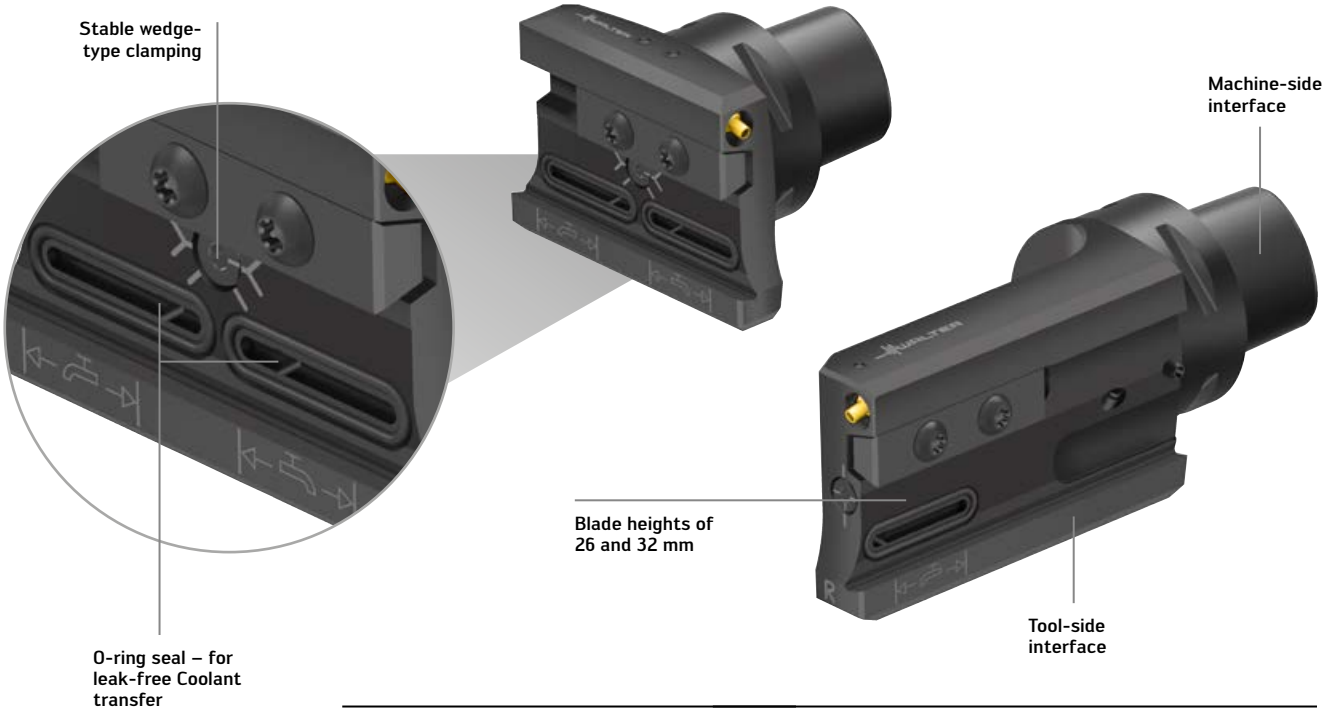


Walter Capto™ blade adaptors

Fig.: A2111-C5-26N-080-P
Fig.: A2110-C5-26R-122-P

### POTENTIAL BENEFITS

– Increase in tool life and improved chip formation due to precision cooling
– Easy handling from plug-and-play solution
– Reduction of downtimes
– High process reliability due to the stable wedge clamping of the grooving blade

# Drion·tec® E-Peak

## The Peak of Productivity



## Walter AG

Derendinger Straße 53, 72072 Tübingen
Postfach 2049, 72010 Tübingen
Germany

walter-tools.com

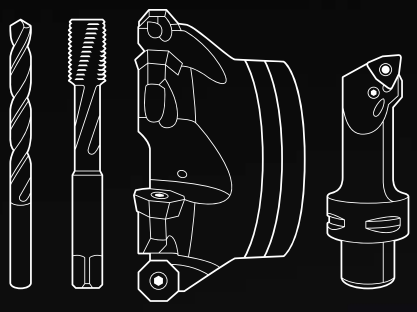

## Europe

**Walter Austria GmbH**
Wien, Österreich
+43 1 5127300-0, service.at@walter-tools.com

**Walter Benelux N.V./S.A.**
Zaventem, Belgique
(B) +32 (02) 7258500
(NL) +31 (0) 900 26585-22
service.benelux@walter-tools.com

**Walter (Schweiz) AG**
Solothurn, Schweiz
+41 (0) 32 617 40 72, service.ch@walter-tools.com

**Walter CZ s.r.o**
Kurim, Czech Republic
+420 (0) 541 423352, service.cz@walter-tools.com

**Walter Deutschland GmbH**
Tübingen, Deutschland
+49 (0) 7071 701-400, service.de@walter-tools.com

**Walter France**
Soultz-sous-Forêts, France
+33 (0) 3 88 80 20 00, service.fr@walter-tools.com

**Walter Hungária Kft.**
Budapest, Magyarország
+36 1 464 7160, service.hu@walter-tools.com

**Walter Tools Ibérica S.A.U.**
El Prat de Llobregat, España
+34 934 796760, service.iberica@walter-tools.com

**Walter Italia s.r.l.**
Via Volta, s.n.c., 22071 Cadorago - CO, Italia
+39 031 926-111, customerservice.wit@walter-tools.com

**Walter Norden AB**
Halmstad, Sweden
+46 (0) 35 16 53 00, service.norden@walter-tools.com

**Walter Polska Sp. z o.o.**
Warszawa, Polska
+48 (0) 22 8520495, service.pl@walter-tools.com

**Walter Tools SRL**
Timisoara, România
+40 (0) 256 406218, service.ro@walter-tools.com

**Walter Tools d.o.o.**
Maribor, Slovenija
+386 (2) 629 01 30, service.si@walter-tools.com

**Walter Slovakia, s.r.o.**
Nitra, Slovakia
+421 (0) 37 3260 910, service.sk@walter-tools.com

**Walter Kesici Takımlar Sanayi ve Ticaret Ltd. Şti.**
Bursa, Türkiye
+90 (0) 224 909 5000 Pbx, service.tr@walter-tools.com

**Walter GB Ltd.**
Bromsgrove, England
+44 (1527) 839 450, service.uk@walter-tools.com

## Asia

**Walter Wuxi Co. Ltd.**
Wuxi, Jiangsu, P.R. China
+86 (510) 853 72199, service.cn@walter-tools.com

**Walter Wuxi Co. Ltd.**
中国江苏省无锡市新区新畅南路 3 号
电话：+86-510-8537 2199 邮编：214028
客服热线：400 1510 510
邮箱：service.cn@walter-tools.com

**Walter Tools India Pvt. Ltd.**
Pune, India
+91 (20) 6773 7300, service.in@walter-tools.com

**Walter Japan K.K.**
Nagoya, Japan
+81 (52) 533 6135, service.jp@walter-tools.com

ワルタージャパン株式会社
名古屋市中村区名駅二丁目 45 番 7 号
+81 (0) 52 533 6135, service.jp@walter-tools.com

**Walter Korea Ltd.**
Anyang-si Gyeonggi-do, Korea
+82 (31) 337 6100, service.wkr@walter-tools.com

한국발터(주)
경기도 안양시 동안구 학의로 282
금강펜테리움 106호 14056
+82 (0) 31 337 6100, service.wkr@walter-tools.com

**Walter Malaysia Sdn. Bhd.**
Selangor D.E., Malaysia
+60(3)-5624 4265, service.my@walter-tools.com

**Walter AG Singapore Pte. Ltd.**
+65 6773 6180, service.sg@walter-tools.com

**Walter (Thailand) Co., Ltd.**
Bangkok, 10120, Thailand
+66 2 687 0388, service.th@walter-tools.com

## America

**Walter do Brasil Ltda.**
Sorocaba – SP, Brasil
+55 15 32245700, service.br@walter-tools.com

**Walter Canada**
Mississauga, Canada
service.ca@walter-tools.com

**Walter Tools S.A. de C.V.**
El Marqués, Querétaro, México
+52 (442) 478-3500, service.mx@walter-tools.com

**Walter USA, LLC**
Greer, SC, USA
+1 800-945-5554, service.us@walter-tools.com

Subject to change without notice due to technical improvements. Made in Germany (10/2026) GB - Copyright Walter AG